Rock, Rattle & Roll

Preparing the City & County Building for an Earthquake

Objectives

Students will:

Examine a picture showing the effects of an earthquake on the City and County Building.

Discover the concept of base isolation and its application to the City and County Building.

Simulate the operation of base isolators with their knees.

Setting the Stage

1. Assess student knowledge of earthquakes. ***Ask students:*** *What is an earthquake? Do we have earthquakes in Utah? What can earthquakes do to buildings?*

2. Show overhead of *Diagram of City and County Building* in an Earthquake. ***Ask students:*** *What do you think is happening in this picture?* Discuss student answers.

3. ***Explain:*** This is a computer model of what might have happened to the City and County Building in an earthquake before it was restored. These lines show how the shaking earth would make the building whip back and forth. *Do you think the City and County Building could stand up if it shook like this? Why or why not?*

Student Instruction

1. ***Explain:*** People wanted to make the City and County Building safer in an earthquake during the restoration project. The engineers who worked on the City and County Building were very creative. Many engineers had developed ways of making a building stronger so the shaking of the earthquake would not cause as much damage. The City and County Building engineers thought that making a building stronger was a good idea, but the best idea was to prevent the building from shaking so much during the earthquake. They heard about a new technology called base isolation which could help a building stay still. They decided to try it. It was the first time base isolation had been used on a historic building.

Materials

Teacher Background on Base Isolation

Diagram of City and County Building in an Earthquake (1 overhead)

Diagram of Base Isolator (1 overhead)

Diagram of City and County Building on Base Isolators (1 overhead)

Two books

Simple objects to serve as obstacles in a short relay course (i.e., boxes, books, blocks)

Optional: slinky

Core Curriculum Objectives

3rd Grade
Science
3030-0302

Social Studies
6030-0602

2. Share background information on base isolation. Show overheads of *Diagram of Base Isolator* and *Diagram of City and County Building on Base Isolators*. Demonstrate the motion of base isolators with a slinky, if available. Put one hand on top of the slinky and one hand on the bottom. The top hand represents the building and the bottom represents the ground. Show that you can slide the bottom hand around, like the ground in an earthquake, while the top hand stays still. (The slinky is one of the best visuals for helping students understand base isolators.)

Student Activity

1. Prior to activity, create a short relay course with simple obstacles that students must walk over.

2. ***Ask students:*** *Have you ever been skiing, waterskiing, skating, or skateboarding? What part of your body acts like a spring when you do these sports?*

3. ***Explain:*** Our body has shock absorbers like base isolators. When we ski or skate our knees take the bumps and keep our upper body fairly stable. This is how the base isolators keep the City and County Building from shaking too much in an earthquake. When the ground shakes, the isolators will act like springs and absorb the shock. The building above will move very little.

4. Tell students they are going to use their knees like base isolators in an earthquake. Divide students into two relay teams. Students take turns walking the course with a book on their head without dropping the book. Explain that the book represents the building, their upper bodies are the foundation, and their knees are the base isolators. Walking and stepping over obstacles simulates the earthquake.

5. After the relay, discuss the experience with students and review concept of base isolation.

Base Isolation

The City and County Building' s earthquake protection system uses a relatively new technology called base isolation. The 443 isolators which support the building allow it to "ride out" earthquakes by insulating the building from violent seismic ground motions and allowing it to move independently of the surrounding ground surface.

Each base isolator looks like a large black rubber block about 17" x 17" x 15". Inside the isolators are composed of alternating layers of rubber and steel plates. The plates stiffen the isolators vertically so the building will not bounce as if on springs. The isolators are very flexible horizontally, however, much like a slinky. They permit the building to slide gently sideways up to 12 inches in any direction.

To prevent the building from swaying back and forth in strong winds or minor quakes, many isolators have lead cylinder cores. These cores are designed to yield and absorb energy when earthquake ground motion becomes sufficiently strong.

To place the City and County Building on the isolators, contractors lifted the massive 40,000 ton building in stages. Then an elaborate system of reinforced concrete and steel beams was constructed around and within the old foundation. A new concrete and steel first floor was built to create a rigid platform for the building to rest on atop the isolation system. After the isolators and beams were placed on top of the existing footings, the bottom part of the walls was completely cut away using a diamond-embedded wire rope saw. Thus the entire weight of the building was transferred to the base isolators.

Key to the functioning of the base isolation system in the "moat" which surrounds the City and County Building. The ground around the building was excavated to create an 18 inch moat to provide an open space in which the building can move without impacting the surrounding earth. The moat is covered with a metal plate to prevent people from falling into it.

The stairways at each of the four main entrances to the building are suspended above the ground and will float with the building in an earthquake. All utility lines going in and out of the building are connected with flexible hose joints to prevent breakage when the building moves.

In addition to the base isolators, several other steps were taken to reduce earthquake damage at the City and County Building. The statues and gables were reinforced. The floors and roof were also strengthened and given a stronger connection to the walls. Massive steel cross-beams were installed in the 250 foot-high clock tower. The seven-foot-thick piers which support the 7000-ton tower were encapsulated with a concrete collar and now rest on base isolators.

The decision to base isolate the City and County Building saved the city millions of dollars in construction costs. Conventional methods of making buildings stronger often consist of adding shear walls, anchors, and structural steel members. This conventional approach can be expensive and very disruptive to historic materials. For example, the entire interior of the California State Capitol was removed and replaced with new materials during a seismic upgrade.

Because a building reinforced in a conventional manner is still rigidly attached to the ground, it can still suffer severe damage when the ground shakes violently during a major earthquake. In contrast, a base isolated building moves independently of the ground during a quake, swaying gently back and forth within its moat. The earthquake motion reaching the building is greatly reduced by the isolators and thus damage is likely to be minimal.

The City and County Building was the first historic building in the world to be placed on base isolators. Previous to this project, only one other building in the United States, a new structure, had been base isolated. Architects and engineers from around the world come to see the City and County Building. Salt Lake City hosted an international symposium on base isolation in May 1988.

2 Diagram City & County Building in an Earthquake

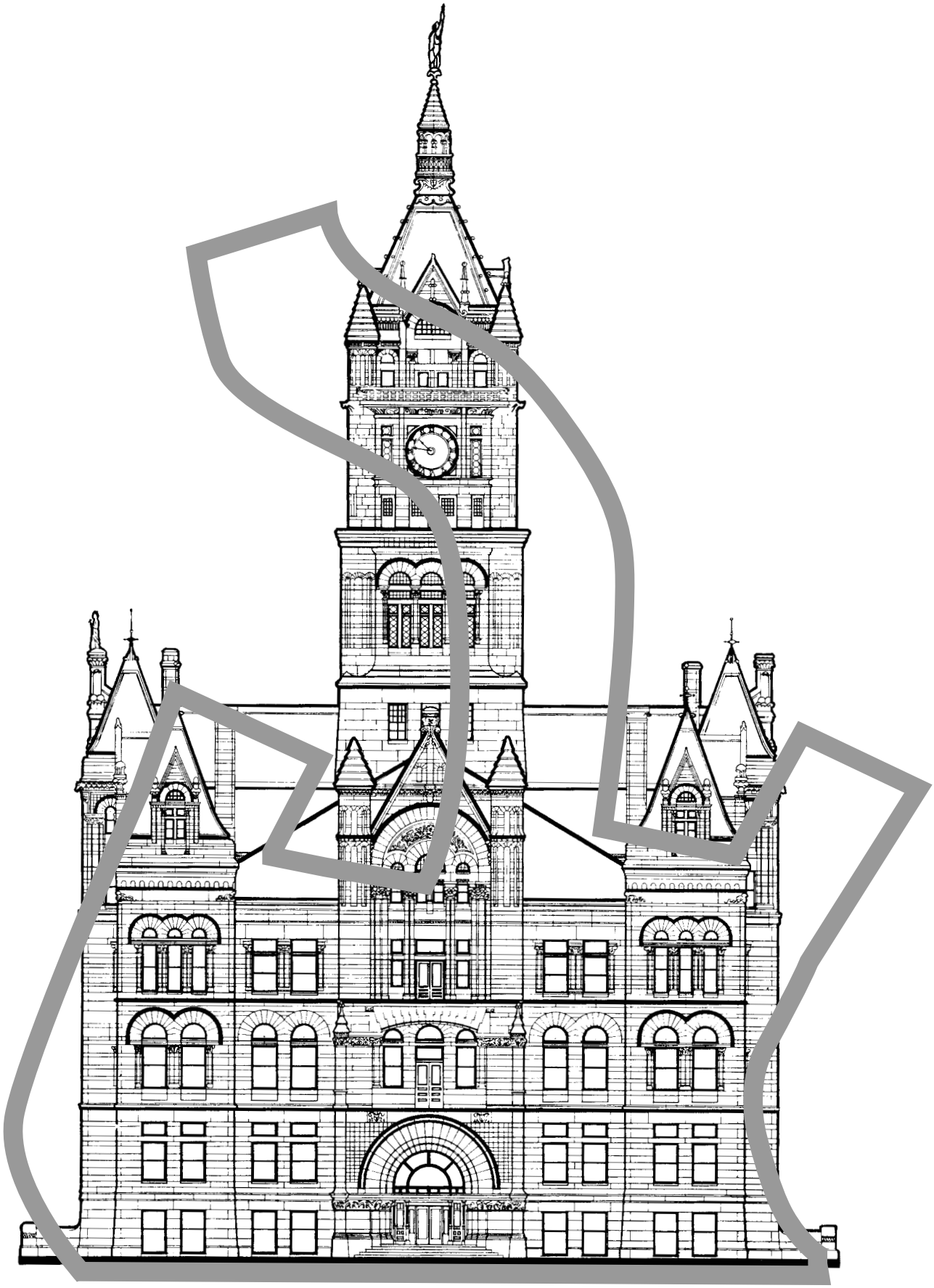

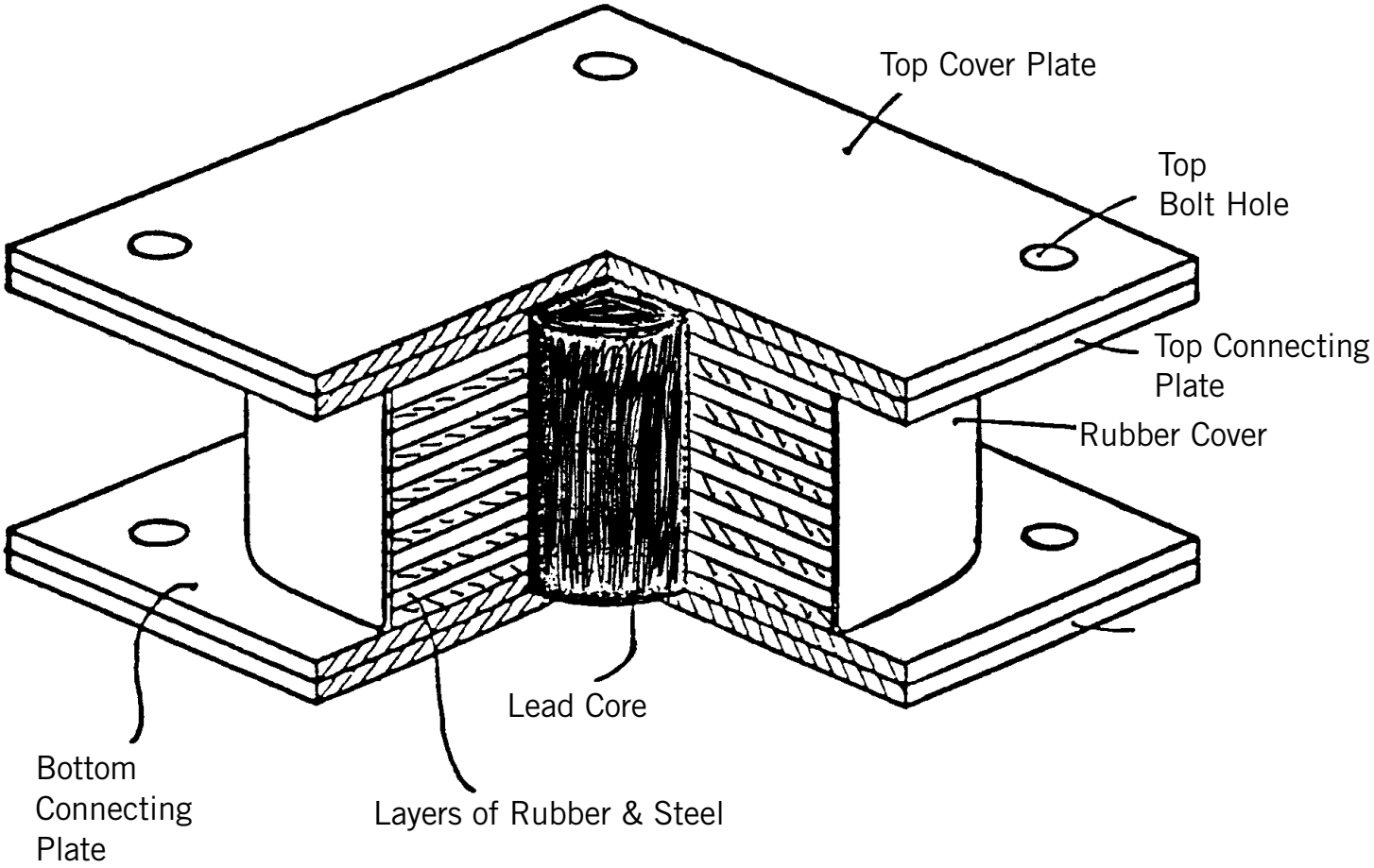

2 Diagram City & County Building on Base Isolators

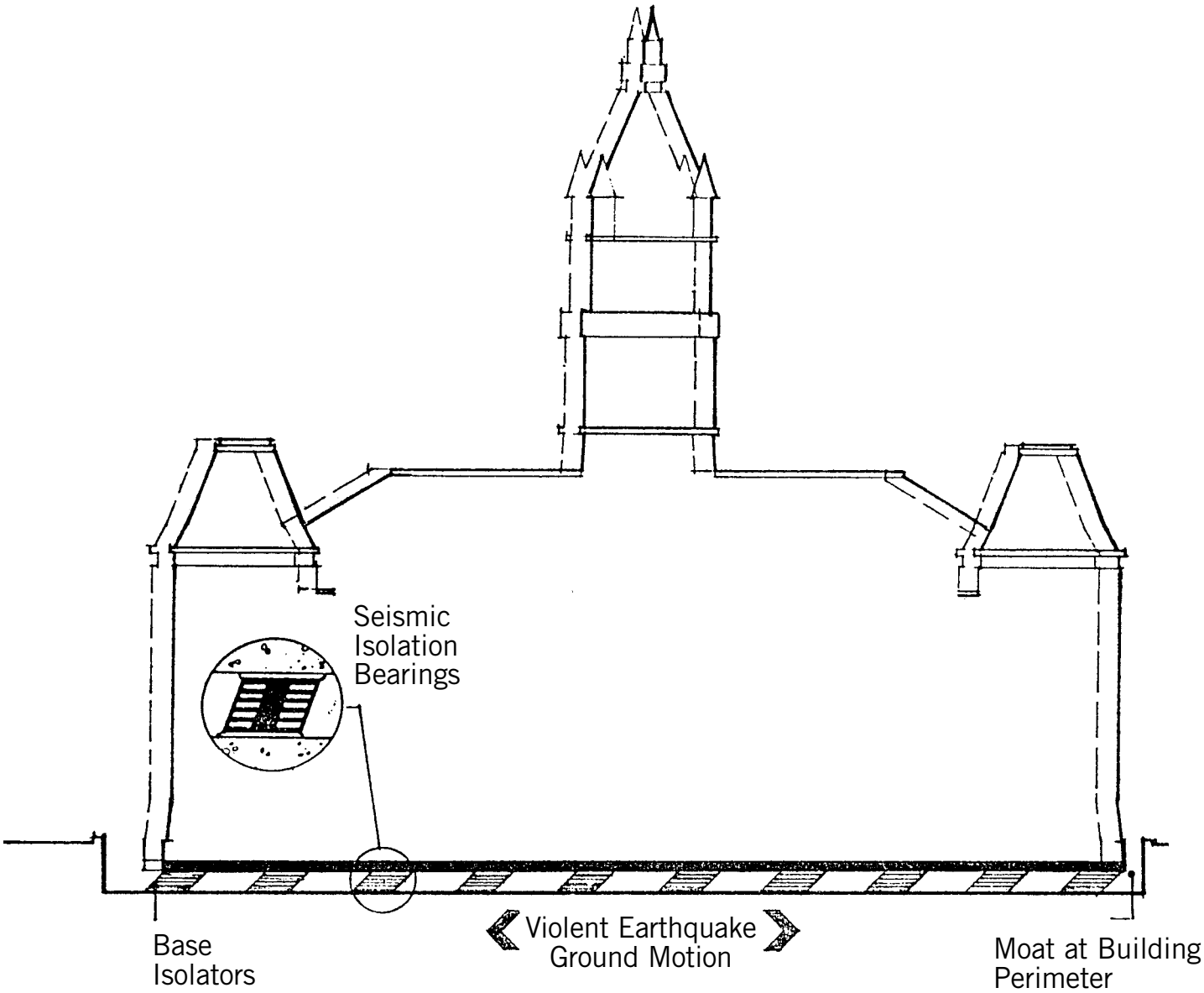

Building Sways Gently on Rubber Pads,
Isolated from Violent Ground Motions